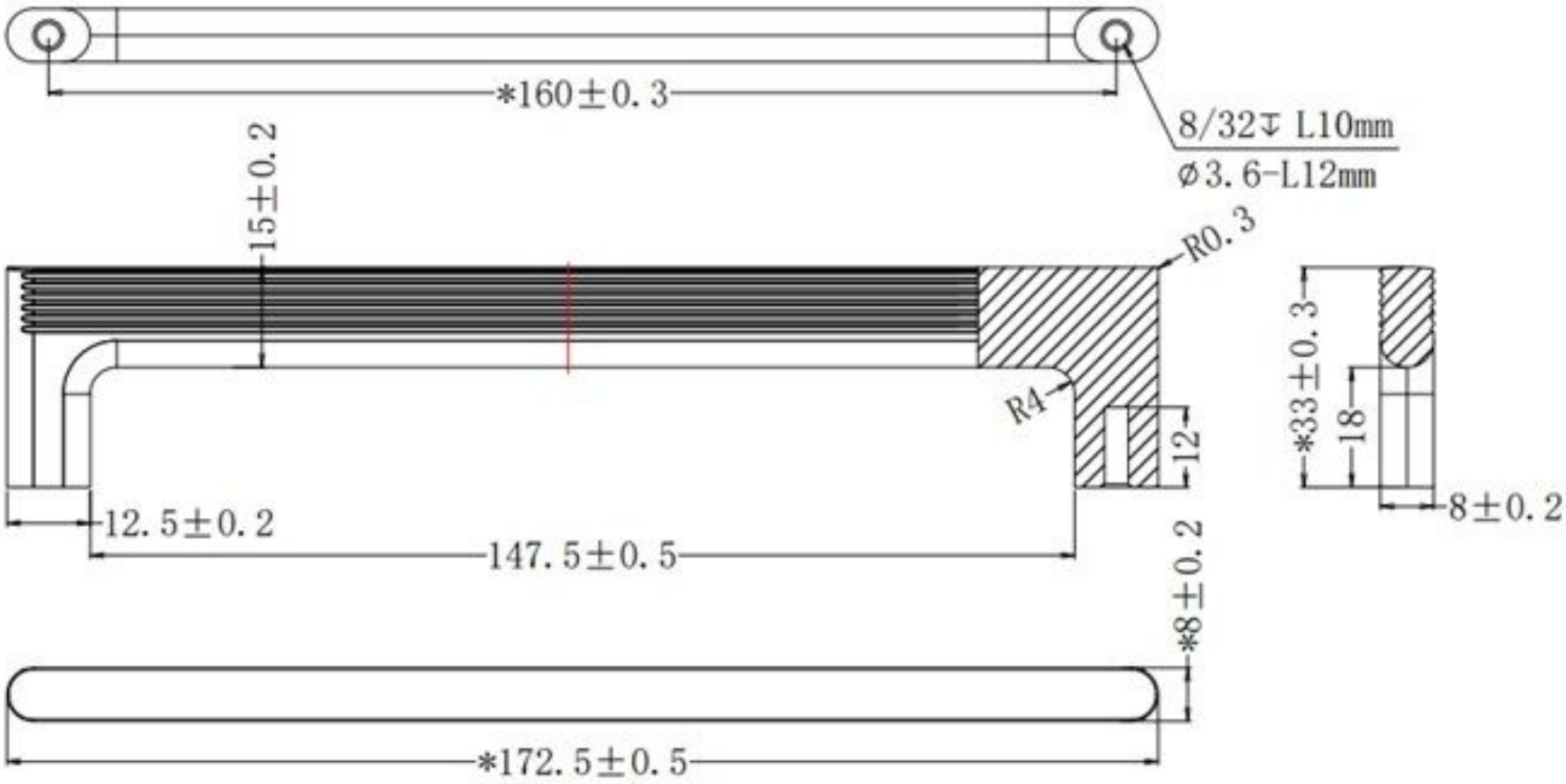
*160±0.3
8/32↧ L10mm
ø3.6-L12mm
15±0.2
R0.3
R4
12
*33±0.3
18
8±0.2
12.5±0.2
147.5±0.5
*8±0.2
*172.5±0.5