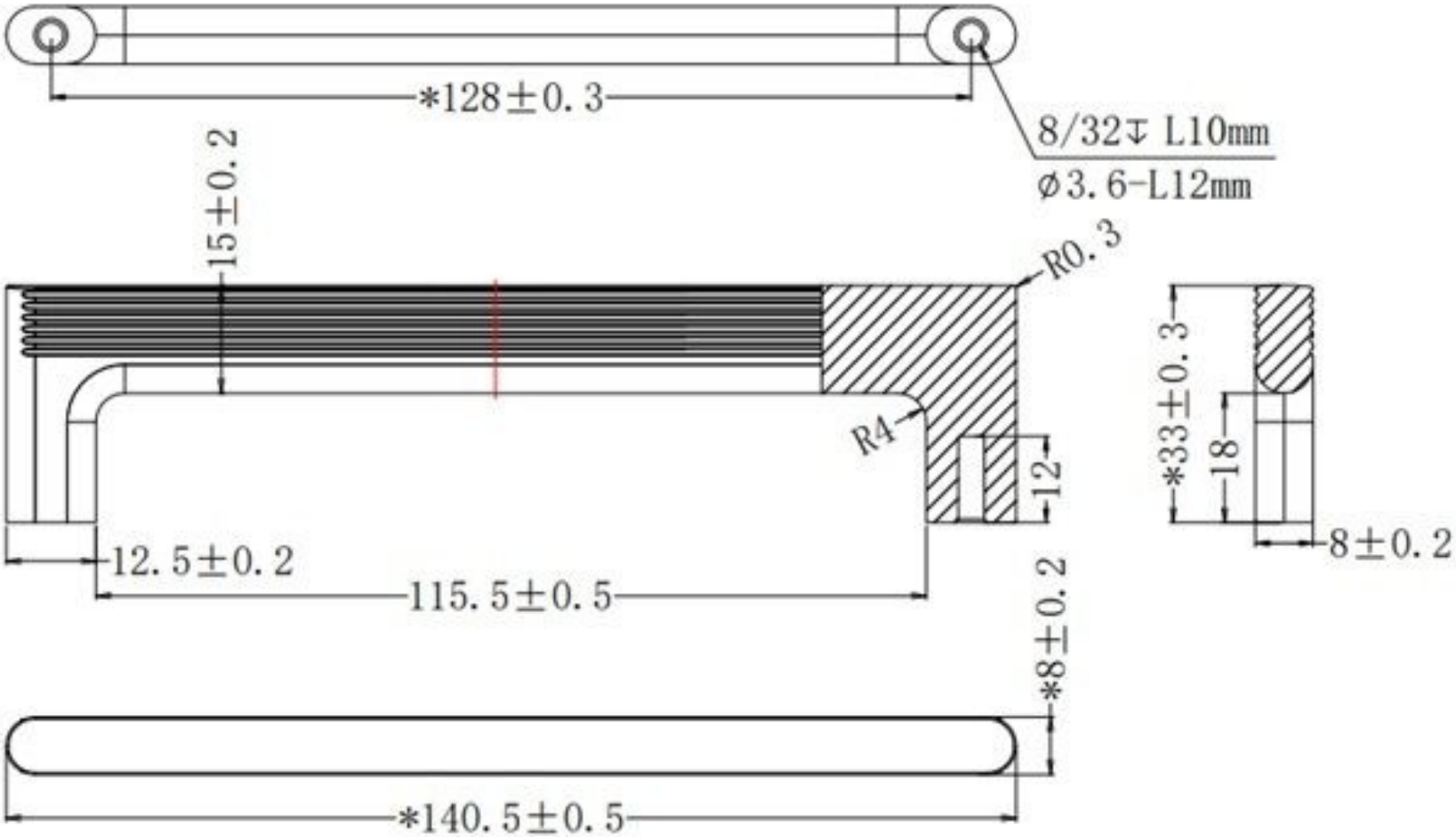
*128±0.3
8/32↧ L10mm
⌀3.6-L12mm
15±0.2
R0.3
R4
12
12.5±0.2
115.5±0.5
*8±0.2
*140.5±0.5
*33±0.3
18
8±0.2